Deck Replacement for the Skewed Truss Bridge on MD 24 Over Deer Creek in Harford County, Maryland Utilizing a Fiber-Reinforced Polymer (FRP) Bridge Deck

JEFFREY ROBERT, Maryland State Highway Administration, Baltimore, Maryland and CHUNG C. FU Ph.D. and HAMED ALAYED, The Bridge Engineering Software and Technology (BEST) Center, University of Maryland, College Park, Maryland

IBC-02-56

KEYWORDS: Fiber-Reinforced Polymer (FRP), Truss Bridge, Deck Replacement, In-situ testing

ABSTRACT: A thorough discussion is presented on Maryland State Highway Administration's first bridge rehabilitation project utilizing a fiber reinforced polymer (FRP) deck. The discussion includes design details, installation procedure, construction methods and in-situ load testing with a wireless monitoring system. Recommendations are also offered on improving the design details based on this experience.

INTRODUCTION

The existing steel through truss bridge on MD 24 over Deer Creek is located in Harford County, Maryland. This bridge, known as the Rocks Steel Truss Bridge, was built in 1934 and is eligible for inclusion in the National Register of Historic Places. The bridge is 122'-6" long and carries two lanes of traffic providing 30' of clear roadway (see Table 1)

Table 1-Description of Structure

Structure Type	5 panel steel through Warren truss with verticals
Span Length(s)	5 panels at 24'-6" = 122'-6" c/c brg
Truss depth	24'-6"
Skew	56-deg. skew from the normal
Roadway/Structure Widths	30'-0" / 33'-0"
Truss Connections	Riveted connections
Stringer Spacing	8 stringers @ 4'-1"
New Deck type	7.66" FRP deck
Structural Steel	Fy = 33 ksi, E=29,000 ksi

The bridge deck was in poor condition and required replacement. The remainder of the structure was in good condition with only minor concrete patching work to the bridge abutments, cleaning of the bridge bearings and painting of the truss needed.

Often these older structures require weight restrictions to be imposed, since they were designed for loads much less than today's legal loads. In addition and deterioration has reduced the structural capacity even further. Because this bridge is eligible to be classified as historic, all work was carefully scrutinized to assure the structure's historic characteristics were not altered. It is a difficult task to repair the structure and increase the live load capacity without sacrificing the historic characteristics.

The traffic volume crossing this bridge is such that a complete detour of traffic during construction was acceptable during the summer months, but unacceptable when school was in session since the bridge is on a school bus route. The bridge repairs had to be performed in the ten-week period when schools are out of session. Based on these

constraints, the use of a fiber reinforced polymer (FRP) deck became an attractive alternative for this bridge with its many advantages such as light weight, corrosion resistance and fast installation time.

The use of an FRP deck was a first for the Maryland State Highway Administration (SHA). Partnering with the University of Maryland, the Maryland SHA Bridge Office applied for and received a Federal Highway Administration's Innovative Bridge Research and Construction (IBRC) Program grant to install and study an FRP deck. This covered expenses associated with design, construction, and future monitoring / testing of the FRP deck. Other money for rehabilitation work was supplied by Maryland SHA's Bridge Rehabilitation Funds.

SELECTION OF DECK SYSTEM

There are several manufacturers of FRP decks on the market. They all have differences between them such as manufacturing methods, geometry, method of deck attachment and construction installation. The selection of the deck for this project was contingent on two factors. This bridge is a truss bridge comprised of two warren trusses with verticals connected together by overhead cross connecting members. These overhead members make it difficult to set panels with a crane. The most efficient deck installation method for this bridge is one that allows the panels to be placed with a small forklift. This requires that the proposed deck system be able to support construction loads, in this case a forklift, immediately after placement. The deck is constructed in a sequential manner starting at one end of the bridge and then progressing to the other end of the bridge. To set each subsequent panel, the forklift must walk out on previously set panels. The selected deck is capable of supporting loads immediately after placement. In contrast some other FRP deck systems require full grouting of the deck panel(s) before the panels could take any loading. This is a large disadvantage for those systems for a bridge such as the MD 24 bridge with overhead members.

The second factor affecting deck selection involved minimizing the complexity of construction. Specifying construction techniques that are familiar to local contractors helps keep construction costs down and assures a better end product. The selected FRP deck used an attachment system similar to that used for construction of reinforced concrete decks on steel girders in our region. This system required steel angles to be welded to the sides of the stringers to form a haunch. The FRP deck is placed on the steel angles (later the haunch) and is attached to the stringer using steel shear studs installed in prefabricated pockets in the deck at regular intervals. Before traffic is allowed on the bridge, the shear stud pockets are filled with non-shrink grout. This entire system can be installed working from above the steel stringers.

DESIGN CHALLENGES

The design of any bridge poses unique design challenges. Standard design details and practices must be modified to accommodate the parameters of a particular project. Working with a new design material dramatically increases the design challenges as very few standard details or practices exist to use as models.

One design challenge for this bridge was the severe roadway skew. The FRP deck panels are placed perpendicular to the stringers and act as a continuous beam between the stringer supports. A problem arises at the ends of the bridge where the skew is encountered. At this location, the edges of the panels have no bearing support. To provide this necessary support, a concrete diaphragm was placed between the existing stringers (see Figure 1). The installation of the concrete diaphragm also solved several of our other concerns, including how to install the compression / expansion joints, how to protect the joint and the ends of the panels from damage due to live load impacts and how to limit deflections at the ends of the bridge that cause that "uncomfortable bump" when one is driving. The diaphragm was formed such that the first 10" of the deck is concrete. This allows the compression / expansion joint to be armored with a steel angle, which protects the compression / expansion joints. It also allows for the few inches of the FRP deck to be anchored to the concrete protecting the end of the FRP deck from damage.

Another design challenge involved creating the roadway crown. The selected deck is manufactured by the protrusion method. The E-glass fiberglass strands and fabric are pulled through a die at the same time they are coated with an isophthalic polyester resin. The deck panels that are produced are perfectly flat. Therefore the accommodation of a roadway crown must be accomplished by one of two different

methods. The first method is in the overlay that is applied to the FRP deck. The overlay thickness is simply varied across the deck to achieve the necessary crown and roadway cross slope. The advantage of this method is that the deck panels can be installed level without splicing the top chord of the panel, which is cheaper and quicker to install. The disadvantage of this method is that the overlay can become excessively thick and may pose problems for overhead clearance depending on the width of the bridge. It also adds weight to the deck, which lessens one of the advantages of this type of deck system – its light weight. Because the bridge did not have weight restrictions and overhead clearance was not a problem, it was decided that the roadway crown would be accommodated in the deck overlay. This would allow for a cheaper, easy installation.

Figure 1 – Concrete Abutment Diaphragm

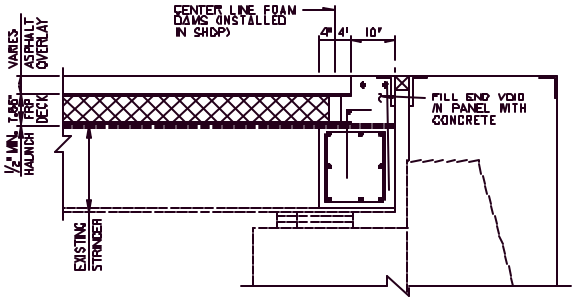

The second method to accommodate the roadway crown involves cutting the top chord of the panel member at the crown location. The two halves, each side of the cut, are rotated to achieve the required crown and cross slope. This rotation opens the cut made in the top chord of the panel, which is fixed by a face sheet splice made in the field after the deck installation. It is advantageous to have the cut in the top chord of the panel member occur over a stringer to provide support, otherwise the splice must be designed for strength rather than simply closing the gap. This bridge does not have a stringer centered in the bridge cross section where the roadway crown occurs, therefore the splice would have had to be designed as a structural splice. The advantage of this method is that only a minimal overlay is required. A disadvantage is that this method is labor intensive and therefore more expensive to install. The preparation of the bridge stringers to accept the deck is also more difficult since the haunch on each stringer must be set to different elevations. Due to the added costs that served no substantial benefit for this bridge, this option was not selected.

Another design decision concerned the type of overlay to be applied over the FRP deck. An overlay is required because the surface is relatively smooth. Therefore the skid resistance is too low to meet minimum safety standards. In addition, the locations of the deck panel splices are noticeable. It has been the Maryland SHA's policy to use polymer concrete for all bridge overlays. Our objection to using asphalt is that the roadway salts used for deicing often penetrate through the asphalt and are trapped between the asphalt and the bridge deck causing deterioration of the concrete deck that cannot be seen from visual inspection. With the FRP deck, corrosion is not indicated to be a problem, therefore an asphalt overlay was acceptable for this project. Approach paving was required, thus the paving equipment would be present on site eliminating the mobilization and setup cost. The asphalt overlay is also installed much quicker and requires essentially no cure time as opposed to the polymer concrete that would require several days at a minimum. There is also a concern that a polymer concrete overlay might crack if there is any differential movement between deck panels. Several other states that have tried a polymer concrete overlay have experienced cracking at the joint locations in the FRP deck panels. Some of these cracking problems have been attributed to poor surface preparation. The Maryland SHA chose to use an asphalt deck overlay.

ADVANTAGES / DISADVANTAGES

FRP decks offer many advantages such as lightweight, reduced installation time, and corrosion resistance. The FRP deck installed on the MD 24 bridge weighed 25 lbs./sq. ft for the deck, connections and grout and an additional 45 lbs./sq. ft for the asphalt overlay, for a total of 70 lbs./sq. ft. This is a significant difference when compared to the 115 lbs./sq. ft for a traditional reinforced concrete deck. This large difference in dead weight allows the bridge's live load capacity to be increased. Often weight restrictions on older bridges may be removed with the installation of an FRP deck. For this bridge, the controlling loading was the HS 20 truck. Before the FRP deck installation the inventory rating was 0.92 (performed using LFD code). After installation of the FRP deck, the inventory rating was increased to 1.12.

Another advantage of FRP decks is the resistance to corrosion. The major problem with reinforced

concrete decks is that cracking occurs over time allowing water and chlorides (used for roadway deicing) to penetrate the deck causing corrosion and deterioration of the concrete and steel reinforcement. This deterioration limits the life of the concrete deck to about 40 years. FRP decks have been tested in various bridge environments and corrosive environments and have experienced no deleterious effects. Ultraviolet radiation has been shown to have long term strength reductions in FRP materials. The MD 24 bridge deck will not be exposed to this radiation since it will be covered with an overlay. In addition, a protective additive has been added into the design of the FRP deck panels, which protects against any breakdown from ultraviolet radiation. This FRP deck is expected to have a design life of well over 70 years. However, this material's use in bridge decks is relatively new (less than 10 years) and therefore the life span has never been verified under actual conditions.

Another major advantage of an FRP deck is the fast installation time. An FRP deck can be installed in 1/3 the time of a conventional concrete deck. The quicker installation time can be extremely advantageous when replacing structures with high traffic volumes. Under these conditions, it is extremely important to keep traffic disturbances, delays and detours to a minimum. A cost can be associated with these delays, resulting from an increased fuel consumption and loss of time for the people sitting in the traffic. When these costs are included in a cost comparison between a concrete deck and an FRP deck, the cost of the FRP deck becomes much more competitive.

Despite all the advantages of FRP decks, there are disadvantages that must be considered in the design. One disadvantage is the proprietary nature of the product. There are only a small number of manufacturers of FRP bridge decks, all of whose systems vary in the method of production, the configuration and thickness of the deck and in the connection details used to connect the deck to the bridge. These differences present problems for projects awarded using a competitive bid process. Federally funded projects require designs to accommodate the deck systems of at least three FRP deck manufacturers or they must rely on the contractor to submit a design for the FRP deck system of his choosing for review and approval. This is not ideal because a contractor could choose an undesirable manufacturer. It is also cumbersome and costly to provide plans accommodating three different manufacturers. Therefore, neither of these options is ideal. In the future, establishing design standards could eliminate differences among FRP deck manufacturers. With set standards, contractors will become comfortable with installation procedures. This will allow the construction to be performed in much less time, resulting in reduced deck installation costs. In addition, establishing a testing agency to provide approval for manufacturing companies and their products could establish and raise standards. This would be similar to the Highway Innovative Technology Evaluation Center (HITEC) testing and review performed in the mechanically stabilized earth retaining wall industry.

Another disadvantage of this deck system is the lack of design codes / guidelines. Presently, bridge owners must rely on the manufacturers to perform designs because the engineering community lacks the education on how to design using FRP material and no AASHTO code / guidelines exist. If education were made a priority for the FRP industry, then design engineers would be more comfortable in its use. This could increase industry use that may result in a decrease in the price.

Lastly, the costs of these deck systems are currently prohibitive for wide spread use. FRP decks are usually 2 to 3 times more expensive than a conventional reinforced concrete deck. The deck on the MD 24 bridge was approximately $88/sq. ft, including the asphalt overlay, as compared to the $35/sq. ft average price for a reinforced concrete deck. This cost disadvantage can certainly be offset if life cycle costs are taken into account. However, with an increasing number of deficient bridges requiring repairs and with limited funding, State Departments of Transportation cannot easily justify rehabilitating three bridges versus ten. If other advantages are gained, such as the elimination of a weight restriction on an old bridge, then the higher cost may be justified.

CONSTRUCTION

The installation of the deck was easier than expected, but a few problems were encountered. One problem had to do with the construction of the concrete diaphragms at the abutments. These diaphragms, as mentioned, were designed to support the unsupported ends of the FRP deck panels and stiffen the deck at the expansion / contraction joints. The plan detail (see Figure 1) required the ends of the FRP deck panels to be anchored to the diaphragm and the last

few inches of the panels to be filled with concrete. A few inches of clearance was provided between the joint angle and the end of the panels for placing this concrete within the deck panels. This space would make concrete placement difficult, but not impossible. The problem was that when all the deck panels were installed there was no clearance remaining to allow concrete to be placed within the end of the FRP deck. This was because a tight fit was not achieved at every joint. The design plans showed the joint spaces to be snug. However, in reality small gaps exist between joints resulting in a cumulative addition to length of greater than an inch. To remedy this situation, once all the deck panels were placed, the end of the deck was cut to allow adequate placement of the concrete. For future projects, the concrete end diaphragm would be made wider, allowing more room for concrete placement. In addition, the total length of the deck would take into account the growth of the panels by a small amount at each transverse panel joint.

Fortunately, we required a representative from the FRP deck manufacturer, involved with the design of the project to be on site during installation. This representative has valuable experience and was able to guide the contractor on how best to install the deck and offer valuable input into solving problems such as cutting of the end panels. Our representative was able to arrange for the proper cutting saw to be delivered to the site immediately, in order to cut the necessary panels and properly seal the ends in a matter of hours, avoiding long delays in progress.

TESTING PROCEDURE

The SHA design team, assisted by the BEST Center, worked with Martin Marietta Composites to develop plans. Since there are no design codes for this material, the SHA had to rely on Martin Marietta Composites for the FRP deck design. This meant relying on their experience and large safety factors. This was not satisfactory. To achieve the design confidence to which the SHA is accustomed, it was decided in-situ load testing would be performed to prove the structure's capacity.

For the testing, a wireless monitoring system was used, which is a new technology developed through a previous FHWA small business innovation research (SBIR) contract to Invocon, Inc. in Conroe, Texas. This contract developed a commercially ready data acquisition system to greatly reduce the level of effort required to instrument and obtain data from bridges. The system includes a small data acquisition and communication node connected to four strain gages that can obtain data in digital form and relay the data via two way radio waves to a local base receiver attached to a personal computer. This system is being evaluated for bridge monitoring by researchers at FHWA, Lehigh University, and the University of Texas/Austin in addition to the University of Maryland

The primary goal of the testing was to measure the live load response behavior of the bridge (truss members, floor beams, stringers, and FRP deck). A two-axle dump truck with a gross weight of 32 Kips was used for the controlled load tests. For the testing, two truck paths were specified. A near path with the truck in the travel lane where the test instruments were installed and a far path with the truck in the travel lane not equipped with the test instruments. Three tests were performed for each direction, each at a different speed, 10-mph, 25-mph and 47-mph respectively. Data was recorded continuously for each test. Strain transducers were strategically located as follows to measure strains due to the test live loading:

- Group 1-strain transducers were placed at vertical and diagonal members of the steel truss, respectively. The purpose of this group was to measure the response of these members to live load.
- Group 2-strain transducers were placed at three adjacent steel stringers. These gages were used in studying the distribution of live load between stringers.
- Group 3-strain transducers were placed at the bottom of the FRP deck in the mid-span of the panel in different directions. These gages can show the response of the FRP deck to live load.
- Group 4-strain transducers were placed on the bottom flange of the steel stringer, the top flange of the steel stringer, and the bottom of the FRP deck, respectively, in the mid-span of the panel. Using these gages, the location of neutral axis for the stringer was found, which helped to study the composite action and the contribution of the FRP in resisting compression stress. The effective width of the section was also studied.
- Group 5-strain transducers were placed on the first diagonal member of the steel truss, the bottom chord member of the steel truss, and the steel floor beam, respectively. This group

measured the response of these members (truss members and floor beam) to live load. Strain readings for this set of transducers were recorded for two passes of the test vehicle.

- Group 6 strain transducers were placed at the same location as the group 4 strain transducers, but for a different run. This group recorded one run. It was used to verify the results of group 4.
- Group 7 strain transducers were placed at the same location as the group 3 strain transducers, but for a different run. This group recorded one run. It was used to verify the results of group 3.

TESTING RESULTS

COMPOSITE ACTION BETWEEN STEEL STRINGERS AND FRP DECK - In order to analyze the test results, member and material properties had to be determined. Table 2 and Figure 2 list the section and material properties, which are based on information provided by Martin Marietta Composites for their FRP deck.

Table 2 - Properties

Section Properties	flange thick. t_f (in) =	0.685
	haunch thick. h_t (in) =	1.87
	FRP flange thick. (in) =	0.66
	deck thick. (in) =	7.66
	b_f (in) =	8.27
	t_w (in) =	0.43
	spacing (in) =	49
	web height (in) =	19.76
Modulus of Elasticity	E_{steel} (Ksi) =	29000
	E_{FRP} (Ksi) =	2800

Figure 2 – Properties

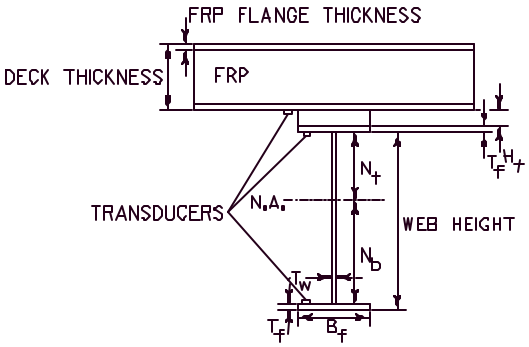

As mentioned previously, group 4-strain transducers were placed on the bottom and top flange of the steel stringer and the bottom of the FRP deck in the panel mid-span. Measured flange strains listed in Table 3 were used to calculate the location of the neutral axis for the stringer. For the three near path tests, the neutral axis was calculated to be an average 13.77 inches above the bottom strain gage, which was placed on the top of the bottom flange of steel stringer. This corresponds to an average 5.99 inches below the top strain gage, which was placed on the bottom of the top flange of the steel stringer. Since the neutral axis is not in the middle of the stringer and the stringer is a symmetric section, the FRP deck acts compositely with the steel stringer causing a shift in the neutral axis.

Table 3 – Measured Strains

	Speed	Comp. Strain ($*10^{-6}$ in/in)	Tension Strain ($*10^{-6}$ in/in)
Truck on Near Side	10 mph	36.63	84.15
	25 mph	38.37	84.66
	47 mph	35.94	86.03
Average of near side		36.98	84.95
Truck on Far Side	10 mph	5.04	11.84
	25 mph	5.84	13.77
	47 mph	4.78	11.59
Average of far side		5.22	12.4

The next step, illustrated in Table 4, was to calculate the effective width of the composite section by applying equilibrium to the cross section of the steel stringer and FRP deck. Linear strain was considered along the cross section to calculate stresses and forces. The top and bottom layers of the FRP deck, each 66″ thick, were considered to take force. Using the linear strain, stresses were calculated for each element of the cross section. The bottom flange of the steel stringer and the steel web beneath the neutral axis are subjected to tensile stresses. The top flange of the steel stringer, the steel web above the neutral axis, and the bottom and top face plates of the FRP deck are subjected to compressive stresses. Based on the area of each element, forces produced by the steel section elements were calculated while the area of FRP elements was unknown because the width needed to be calculated. By equating the tension force to the compression force of the section, the effective width of the FRP section was calculated. The effective width of the FRP section was calculated to be 48.85 inches. The AASHTO criteria for the effective flange width for a composite steel stringer with a concrete deck is governed, in this case, by the half-spacing between stringers, and was calculated to

be 49 inches. The small difference, 0.15 in. (0.3%) can be considered negligible and the effective width can be considered as the half spacing between stringers for this girder spacing.

Table 4 –Calculated Effective Width

Component	Strain*10^{-6} (in/in)	Stress (Ksi)	Force (Ksi)
bottom flange	87.06	2.52	14.3
avg. web T	42.47	1.23	7.29
avg. web C	18.49	0.54	-1.38
top flange	39.09	1.13	-6.42
bottom FRP	54.78	0.15	to be calculated
top FRP	97.98	0.27	
force provided by FRP (Kips) =			13.79
effective width of the composite section (in) =			48.85
half-spacing distance (in) =			49.00
% diff. between calc. eff. width & half space =			0.31
calculated strain (bottom of FRP deck) =			52.75
actual strain (bottom of FRP deck) =			48.00
% diff. between calculated ε & measured ε =			9.89

FRP PLATE ACTION - Four transducers were located at the bottom of the FRP deck to study plate action. Two transducers were located in the longitudinal direction, parallel to the stringers. One was placed 7″ from the stringer web and the other was located in the middle of the FRP span between adjacent stringers. Data was collected for the six tests performed and a consistent trend in the recorded data could not be found. The slower the truck speed, the lower the recorded reading for the strain gages in the longitudinal direction. Due to limitations associated with the transducers, the transducers are not able to catch the actual strain of FRP material in the case of high speeds. Also, it can be concluded that the FRP material does not respond to load as fast as steel. Strain measurements of the FRP deck under loading may require the use of different transducers, perhaps like the ones that are used for concrete. Another inconsistency with the readings can be noted when a comparison is made between readings of the two strain gages. The strain gage in the middle of the FRP deck recorded higher values than the strain gage on the FRP deck at the stringer for all corresponding speeds, which is against expectation. It appears there is some local action due to passing of the wheels above the middle of the span, which influence the measured results.

In the transverse direction, perpendicular to the stringers, two transducers were located to measure tension strain. One was placed 8″ from the stringer web and the other was located in the middle of the FRP span between adjacent stringers. Almost all this FRP span in the transverse direction is under tension, which is logical since the wheels are passed above this span and the adjacent span has no direct load. The strain values here confirm the first conclusion in the longitudinal direction.

STRINGERS - Three stringers were monitored to check the distribution of live load over the stringers. The tested stringers are the second, third, and fourth stringers in the first bay from the end of the bridge. Transducers were located on the top of bottom flanges in the middle of the span. A three-dimensional finite element model was developed, and the ANSYS57 software program was used to perform a mathematical analysis of the bridge. Stringers were modeled as three-dimensional beam elements. Each stringer was divided into two elements in order to apply loads at the midpoint of the stringer to match the tested case. Calculated and tested results are listed in Table 5 below, along with percentage difference, which ranges between 1.47% and 9.43%.

Table 5 – Verifying tested results with calculated results using FEM (ANSYS57) for stringers (strains in *10^{-6} in/in)

Element	w/o truck	w/ truck	L.L. effect	Test results	% Difference
306	25	73	48	53	9.43
307	30	78	48		
308	27	95	68	68	1.47
309	29	95	66		
310	18	86	68	75	9.33
311	14	81	67		

* These values were adjusted to remove the impact effect.
w/o truck : Calculated forces, stresses, and strains without the effect of truck loading
w truck : Calculated forces, stresses, and strains with the effect of truck loading
L. L. effect : Live load effect = w truck - w/o truck
Test Results : Tested strains recorded by testing due to truck loading
% of Difference = [(Test Results - L. L. effect)/ Test results] * 100

These results were used to calculate the distribution factors (DF) which define the percentage of load carried by each stringer. The DF calculated from tested results and from analytical results from the finite element model (FEM) using ANSYS57 were compared with the DF calculated using the AASHTO Standard Specifications (16th Edition, 1996 with 2000 Interim) and AASHTO LRFD (1998 with 2002 Interim) formula (Table 4.6.2.2.2b-1) considering the type of beams as “Concrete Deck, Filled Grid, or Partially Filled Grid on Steel or Concrete Beams...etc.” DF was calculated for interior stringers since the tested stringers are interiors. Comparisons are shown in Table 6. The maximum DF was 0.37 and 0.383 for FEM analysis and tested results, respectively, compared to 0.371 and 0.388 for the AASHTO Standard Specifications and LRFD (1998) formula,

respectively. The maximum DF was used because DF will increase for the other two stringers if the vehicle is closer to the stringer under consideration. It can be observed that using AASHTO LRFD (1998) formula results in DF only 4.9% and 1.3% more than FEM and tested results. Based on this small difference, one can conclude that the AASHTO LRFD (1998) formula can be used for FRP decks on steel stringer with small girder spacings.

Table 6 – Calculating distribution factors for interior stringers

	FEM (ANSYS57)	Tested results	LRFD formula	AASHTO standard
Stringer 1	0.263	0.27	0.388	0.371
Stringer 2	0.367	0.347	0.388	0.371
Stringer 3	0.37	0.383	0.388	0.371

CONCLUSION

Maryland State Highway Administration's first installation of an FRP deck was a positive experience. There were a few minor problems, which was to be expected given the unfamiliar material. Fortunately, these problems were easily remedied in the field without delay.

Based on our experience with our first bridge deck, the Maryland SHA would definitely consider installing another FRP deck in the future. Because of cost, however, it would only be considered under the right circumstances. The right circumstances would be when some of the other advantages of the FRP deck would be beneficial. If advantages such as its light weight or quick installation time offer necessary benefits not offered by the conventional concrete deck, then the added cost of an FRP deck could be justified. One specific type of bridge where this would be true is when replacing existing concrete decks on old truss bridges. Maryland has many historic trusses in need of repair. FRP decks will play a valuable role in the future rehabilitation of these bridges. The field tests and associated finite element analyses have provided us higher confidence in our decision to use an FRP deck and will make it easier for us to use this new material in the future.

REFERENCE

AASHTO, "Standard Specifications for Highway Bridges", p. 32, AASHTO, Washington, D.C. (Sixteenth Edition with Interims up to 2001)

AASHTO, "LRFD Bridge Design Specifications", p. 4-30, AASHTO, Washington, D.C. (Second Edition with Interims up to 2001)