Paper Title: **MARYLAND EXPERIENCE IN USING STRUT-AND-TIE MODEL IN INFRASTRUCTURES**

Author: Chung C. Fu, Ph.D., P.E., Director/Associate Professor, the Bridge Engineering Software & Technology (BEST) Center

Department of Civil & Environmental Engineering

University of Maryland

College Park, MD 20742

Tel: 301-405-2011

Fax: 301-314-9129

E-mail: ccfu@eng.umd.edu

Mita Sircar, P.E.

Bechtel Corporation, Frederick, MD

Jeff Robert, P.E.

Maryland State Highway Administration, Baltimore, MD

Call for Paper:

AFF30 – Concrete Bridges

Title of Session:

Application of Strut-and-Tie Model

Length:

Text	3395 words
Tables (1)	500 words
Figures (7)	3500 words
---	---
Total	7395 words

MARYLAND EXPERIENCE IN USING STRUT-AND-TIE MODEL IN INFRASTRUCTURES

By Chung C. Fu, University of Maryland, Mita Sircar, Bechtel Corp.
and Jeff Robert, Maryland State Highway Administration

ABSTRACT

The truss model is a useful model for concrete beams failing in shear with web reinforcement. This applies to slender beams as well as deep beams. The Strut-and-Tie Model (STM) illustrates the powerful truss concept for reinforced concrete structures in which the compressive stresses are resisted by the concrete struts and the tensile stresses by the reinforcing ties. Five case studies presented here demonstrate the usage of STM in the transportation-related field. The first four cases are simulated by planar STM models and can be solved by hand calculations or the computer program CAST by Kuchma (2004). The fifth case describes curved concrete box girder bridges under torsion. This case of three-dimensional torsional action can be solved by using an extended Strut-and-Tie Model, called softened truss model, to consider both equilibrium and compatibility. This paper focuses on demonstration of the Strut-and-Tie Model used in the transportation area. The State of Maryland is taking this opportunity to share our STM experience with the transportation community.

MARYLAND EXPERIENCE IN USING STRUT-AND-TIE MODEL IN INFRASTRUCTURES

By Chung C. Fu, University of Maryland, Mita Sircar, Bechtel Corp.
and Jeff Robert, Maryland State Highway Administration

INTRODUCTION

Strut-and-Tie is a unified approach that considers all load effects (M, N, V, and T for moment, axial force, shear force and torsion, respectively) simultaneously. The Strut-and-Tie model (STM) approach evolved as one of the most useful design methods for shear critical structures and for other disturbed regions in concrete structures. The model provides a rational approach by representing a complex structural member with an appropriate simplified truss model. There is no single, unique STM for most design situations encountered. There are, however, some techniques and rules which help the designer to develop an appropriate model. These techniques will be discussed below. Strut-and-Tie Model is a conceptual framework where the stress distribution in a structure is idealized as a system of compression members (struts), tension members (ties) and joints (nodes).

The subject of a Strut-and-Tie model was presented by Marti (1985) and then Schlaich et al (1987) and also was contained in the texts by Collins and Mitchell (1991) and MacGregor (1992). One form of the STM has been introduced in the AASHTO LRFD Specifications first Edition (1994). It has since been included in ACI 318-02 Appendix A.

In the Bernoulli hypothesis, it is assumed that a normal cross-sectional plane remains plane and normal to the reference lines when the beam deforms. Bernoulli's hypothesis facilitates the flexural design of reinforced concrete structures by allowing a linear strain distribution for all loading stages, including an ultimate flexural capacity. For torsion, the sectional shape and size in its own plane are assumed to be preserved during torsion, and the cross section can warp out of its plane freely. Based on the St. Venant's Principle, the localized effects caused by any load acting on the body will dissipate or smooth out within regions that are sufficiently away from the location of the load.

Design of the B (Bernoulli or Beam) region (Fig. 1) is well understood and the entire flexural behavior can be predicted by simple calculations. However, even for the most recurrent cases of D (Disturbed or Discontinuity) regions (such as deep beams or corbels), the engineers' ability to predict capacity by traditional methods is either empirical or requires finite element analysis to reach an estimation of capacity. An STM closes this gap and offers the engineer the ability to develop a conservative capacity without sophisticated modeling.

The STM follows the Lower Bound Theorem of Plasticity, which states that a load computed on the basis of an assumed equilibrium moment diagram is less than or at best equal to the true ultimate load. A stress field that satisfies equilibrium and does not violate the yield criteria at any point provides a lower-bound estimate of capacity of elastic-perfect plastic materials. For this to be true, crushing of concrete (struts and nodes) does not occur prior to yielding of reinforcement (ties or stirrups). Nevertheless, there are limitations to the truss analogy. The lower-bound theorem of plasticity assumes that concrete can sustain plastic deformation and is an elastic-perfect plastic material, which is not entirely correct. To address this deviation from the theoretical, AASHTO LRFD Specifications adopted the compression theory to limit the compressive stress for struts with

consideration of the condition of the compressed concrete at ultimate. The prerequisites of such assumptions are:

- STM is a strength design method and the serviceability should also be checked
- Equilibrium must be maintained
- Tension in concrete is neglected
- Forces in struts and ties are uni-axial
- External forces apply at nodes
- Prestressing is treated as a load
- Detailing for adequate anchorage is provided

In strut-and-tie truss models only equilibrium and yield criteria need to be fulfilled as the first two requirements. But, the third requirement, the strain compatibility, is not considered. As a result of this relaxation, more than one admissible Strut-and-Tie Model may be developed for each load case as long as the selected truss is in equilibrium with the boundary forces and the stresses in the Struts, Ties & Nodes are within acceptable limits.

With such a convenient structural analysis tool, questions in STM applications remain:

- How to construct a Strut-and-Tie model?
- If a truss can be formulated, is it adequate or is there a better one?
- If there are two or more trusses for the same structure, which one is better?

Several empirical rules that provide aid in generating STM models are given below:

- Elastic stress contours generated by the finite element analysis provide the general direction of the stress trajectories which are useful in laying out a Strut-and-Tie model.
- Minimum steel content is a goal to achieve. Loads are transmitted by the principle of minimum strain energy. Since the tensile ties are more deformable than the compression struts, the least and shortest ties are the best.
- The crack pattern may also assist in selecting the best Strut-and-Tie model. It is suggested by the tests (MacGregor, 1997) that a STM developed with struts parallel to the orientation of initial cracking will behave very well.
- Other than the empirical rules, the common constraints are the code requirement. ACI and AASHTO code comparisons will also be discussed.

The following case studies will demonstrate usage of STMs in the transportation-related field. The first four cases, which can be simulated by planar STM models, were solved earlier by hand calculations and later solved by CAST (Computer-Aided Strut-and-Tie), a program developed by Kuchma (2004). The fifth case describes curved concrete box girder bridges under torsion. This case of three-dimensional torsional action can be solved by using an extended Strut-and-Tie Model, called softened truss model, to consider both equilibrium and compatibility.

CASE STUDY OF BRIDGE SUBSTRUCTURE USING STM

Case Study 1 - Abutment on Pile: An abutment on piles is widely used in transportation structures. For this case study, the abutment considered is 33-ft long, 3-ft wide and 3-ft deep. Eleven prestressed concrete deck beams bearing on elastomeric pads are supported at intervals of 3-ft along the length of the abutment. The concrete slabs span 50-ft and transfer 107.61 kips

factored load on each elastomeric pad. The abutment is supported on 6 piles spaced at 6-ft on center. With this geometry, where depth is just half the distance between the supports, this abutment is a special deep beam where Bernoulli's region does not exist and there is a disturbed region throughout. AASHTO states that Bernoulli's region does not exist when the depth to span ratio exceeds 2/5. This beam just exceeds this limit. According to one of the criteria of St. Venant's principle, D-regions are those parts of a structure within a distance equal to the beam depth of the member from the concentrated force (load or reaction).

Elevation views of the structure and Truss model are presented in Figs. 2a and 2b, respectively. Based on the calculation by CAST program, maximum compression in the diagonal strut is 101.87 kips and vertical strut is 107.61 kips. Maximum tension in the top tie is 31.76 kips and in the bottom tie is 50.87 kips. Size of the upper nodes is determined by the size of bearing and the size of the lower nodes is decided by the size of piles. Rebar sizes and arrangements are finalized after a few iterations. Bearing reinforcement details in the width direction can be determined by a simple truss model in the horizontal direction. The abutment is 3-ft wide and the strut section 36"x6" provides the required strength for the struts. For Ties, 3-# 6 bars can provide the required strength. However, code-specified minimum reinforcement must be provided to prevent temperature, creep and shrinkage related issues.

Case Study 2 - Walled Pier: Another common element found in transportation structures is a solid shaft bridge pier on a Mat Foundation. This case study is done for an 18-ft high by 3-ft wide wall on mat foundation. Four girders are resting on the wall and each girder reaction is 215.22 kips. St. Venant's Principle states, "The localized effects caused by any load acting on the body will dissipate or smooth out within regions that are sufficiently away from the location of the load." Elevation of the structure is shown in Fig. 3a.

Based on the same principal, an STM model is developed for the walled pier and presented in Fig. 3b. The inclined angle θ can either be obtained from stress trajectory plot or be assumed to vary from 65° for l/d = 1 to 55° for l/d=2.0, where l is the wall length and d is the height. A reasonable path at a 2 to 1 slope is created here to flow the concentrated loads from the top of the wall and make their way towards the mat foundation. Maximum strut force is 128.9 kips and maximum tie force is 50.22 kips which are in the same range of Case Study 1 and a similar strut width and reinforcement will be sufficient. Again, for this case, minimum steel per code provisions applicable to wall has to be provided.

Case Study 3 - Crane Beam: A conservative estimate of the resistance of a concrete structure may be obtained by the application of the lower-bound theorem of plasticity. If sufficient ductility is present in the system, a strut-and-tie model fulfills the conditions for the application of the above theory. The lower-bound theorem requires identifying at least one plausible load path and insuring that no portion of the load path is overstressed.

This case study pertains to the Gantry Crane Beam at the Maryland Port Authority Harbor (Fig. 4). The beam section is 6-ft deep by 2-ft wide and has 5-spans, each 6-ft. 135# gantry rail on continuous base plate (1/2-in thick by 24-in wide), anchored with the beam and the whole assembly is encased except for the top 1-in of the rail for wheel movement. A schematic sketch of the structure can be seen in Fig. 5.

Five-span continuous beam models are built with five different configurations to simulate the stress trajectories for the moving wheel loads of the crane. Five configurations represent the first wheel placed at 0, L/5, 2L/5, 3L/5, 4L/5 from the end support and other wheels follow the location of the wheel spacing. As shown in Fig. 5, crane loads are applied at the top of the deep beam and

the self-weight of the deep beam is considered as loads to the deck. Crane load consists of 8 wheels, each 180.5 kips (factored). The envelope results for each case are tabulated in the study report to Maryland Port Authority (Fu, 1994). The maximum tension force is 61.45 kips for Case No. 4B and the maximum compression force is 201.84 kips, also for Case 4B. Beam thickness is 24". Based on wheel contact width and height of rail, the width of strut will be 10" minimum, hence the strut section considered is 10"x24". Reinforcements 4- #6 are provided at top and bottom for the tie members. Truss forces and stress interaction (actual/allowable) ratios are well below unity for all the members.

After achieving the solution for members, a detailed nodal analysis is performed. With 10-in width struts the node at the bottom end of the most heavily loaded members was overstressed. A few iterations were necessary to optimize the strut width (ranging from 10-in to 12-in) so that the stress triangles within the nodal zone get re-oriented and meet the strength requirement of the code specified limit of the nodal zone.

The stress fields in Struts and Ties are idealized to be uniaxial whereas the stress fields in Nodal Zones are biaxial. These conditions cause stress discontinuity at the interface of the Strut and Node stress fields and at the interface of the Tie and Node stress fields. The stress discontinuity also occurs along the longitudinal boundary of Strut or Tie stress fields if the selected stress distribution across the Effective Width is uniformly distributed. For two-dimensional structures, the interface between two different stress fields is commonly referred to as Line of Stress Discontinuity. Although the term "Line" is used, the stress discontinuity actually occurs on a surface perpendicular to the plane of the structures, across the D-Region thickness. For this reason reinforcement is required at the nodal locations perpendicular to the plane of the structures. This reinforcement can be seen in Figure 2 provided for the case 1 example.

Case Study 4 – Hammerhead Pier of Thomas Jefferson Bridge: This structure is located in St.Mary's and Calvert counties in Southern Maryland. It was completed and put into service in 1977. During an inspection in 1979, cracks were observed in the deep-water piers. These piers developed cracks from the corner of the girder base plate and were propagated for great lengths. The scope of this case study is to highlight the application of a newer generation strut-and-tie model, which was not in practice at the time of the original design. Thus these piers were not designed with adequate reinforcement and therefore remedial post tensioning was required.

Depth to span ratios vary from 1 to 2 and girders are transferring loads very close to the support edge, making these hammerheads ideal candidates for STM application. There could be numerous reasons for the cracks to develop. Shrinkage, stress concentration or some erection condition may be a few of them.

During STM analysis, presence of cracks was not considered but the existence of the crack will redistribute the stress flow. The choice of load path is limited by the deformation capacity of the beam and a situation may arise when a structure is unable to undergo the force distribution to reach the assumed load path due to presence of cracks. One of the three hammerhead pier caps modeled in STM for this study is shown in Fig. 6.

1. **Pier Cap 1**- Length 28-ft, width 4-ft, depth at the end 3-ft 6-in and at the pier face 9-ft, 4-loads 250 kip each are placed on the top of the cap. The first load is 2-ft from the left end and then the rest are at 8-ft intervals. So the last load is 2-ft from the right end.

2. **Pier Cap 2**- Length 28-ft, width 5-ft, depth at the end 4-ft 6-in and at the pier face 14-ft, 4-loads 290 kip each are placed on the top of the cap. The first load is 2-ft from the left end and then the rest are at 8-ft intervals. So the last load is 2-ft from the right end.

3. **Pier Cap 3**- Length 28-ft, width 6-ft, depth at the end 6-ft and at the pier face 28-ft, 4-loads 550 kip each are placed on the top of the cap. The first load is 2-ft from the left end and then the rest are at 8-ft intervals. So the last load is 2-ft from the right end.

As per this case study 7.5 sq-in reinforcements at the top tie level provided acceptable strength for all three hammerheads.

There could be numerous reasons for the cracks to develop. Shrinkage, stress concentration or some erection condition may be a few of them. During STM analysis, presence of cracks was not considered but the existence of the crack will redistribute the stress flow. The choice of load path is limited by the deformation capacity of the beam and a situation may arise when a structure is unable to undergo the force distribution to reach the assumed load path due to presence of crack. In connection with the crack, the common retrofit is post-tensioning. In the strut-and-tie method, the external post-tensioning can be efficiently modeled as external load. All force acting on the anchorage zone shall be considered in the selection of a strut-and-tie model which should follow a path from the anchorages to the end of the anchorage zone.

Case Study 5 – Curved Concrete Box Girder Bridge: Concrete box girder bridges can be adapted to curved alignments where the box cross section is rigid torsionally. The effect of torsion in a box girder bridge is influenced by the radius of curvature, span lengths, out-to-out width of box structure, depth of structure, and thickness of deck, soffit, and exterior girder webs.
There are no simple rules of thumb to determine whether torsion is a significant factor to be considered in the design of any particular curved structure.

The softened truss model theory applied to reinforced concrete or prestressed concrete multiple cell box was developed by Fu, et al (Fu and Yang, 1996; Fu and Tang, 2001). By using this model, the concrete torsional problem is solved by combining equilibrium and compatibility conditions and constitutive laws of material, which is more sophisticated than the pure equilibrium STM model.

A schematic sketch of a multi-cell box section under torsion is shown in Fig. 7(a) while simplified forces subjected to shear, torsion, and bending are shown in Fig. 7(b). A reinforced or prestressed concrete element, as shown in Fig. 7(c), is reinforced orthogonally with longitudinal and transverse steel reinforcements. After cracking, the concrete is separated by diagonal cracks into a series of concrete struts, as shown in Fig. 7(d). This example shows that the STM can also solve the problem of girder under torsion.

Comparison of AASHTO and ACI 318 Provisions - Table 1 shows examples of stress limits and strength reduction factors defined in the ACI Code and AASHTO LRFD Bridge Design Specifications, respectively. As shown in the table, there are substantial differences in the rules used in these provisions and guidelines because of uncertainties associated with defining the characteristics of an idealized truss within a continuum of structural concrete.

SUMMARY

The five cases shown above demonstrate that whenever common practice is used for designing D-Regions, the practice leads to deficiencies or inefficiencies in the design of these commonly

occurring and often critical parts of structures. Due to the inadequacies in common practice, coupled with the unlimited variety of D-Region shapes and loading conditions, it is not surprising that most structural problems occur in D-Regions.

Our findings of STM Models used in the above-mentioned cases studies are:

- The STM formulation that requires the least volume of steel will be the solution that best models the behavior of a concrete member
- This approach holds great promise for DOTs and design offices which could develop or obtain standard STMs for certain commonly encountered situations
- Standard reinforcement details based on an STM could be developed for common situations
- The STM then could be reviewed and revised if any parameters change
- The CAST program developed by Kuchma is a useful tool and proved the previous findings when the projects were conducted.

REFERENCES

AASHTO, *AASHTO LRFD Bridge Design Specifications*, American Association of State Highway and Transportation Officials, Washington, DC, 1994 (1st Ed.), 1998 (2nd Ed.), and 2004 (3rd Ed.)

ACI Committee 318, *Building Code Requirements for Structural Concrete (ACI 318-02) and Commentary (ACI 318R-02)*, American Concrete Institute, Farmington Hills, Michigan, 2002

Collins, M.P. & Mitchell, D., (1991) *Prestressed Concrete Structures*, Prentice-Hall, Englewood Cliffs, N.J.

Fu, C. C. (1994) "Study of Crane Beam Check by using the Strut-and-Tie Model," an internal study report to the Maryland Port Administration, University of Maryland, College Park, MD

Fu, C. C. & Yang, D., (1996) "Designs of Concrete Bridges with Multiple Box Cells Due to Torsion Using Softened Truss Model," ACI Structural Journal, Technical Paper, Vol. 94, No. 6, Nov-Dec

Fu, C. C. & Tang, Y., (2001) "Torsional Analysis for Prestressed Concrete Multiple Cell Box," ASCE Journal of Engineering Mechanics, Vol. 127, No. 1, January

Hsu, T. T. C., (1993) *Unified Theory of Reinforced Concrete*, CRC Press, Inc., Florida

Kuchma, D., CAST (Computer-Aided Struct-and-Tie) program downloaded from web site http://www.cee.uiuc.edu/kuchma/strut and_tie/ (Version 0.9.11, Last Update: January 26, 2004)

MacGregor, J.G. (1997) *Reinforced Concrete – Mechanics and Design*, 3rd Edition 1997, Prentice-Hall

Marti, P., "Basic Tools of Reinforced Concrete Beam Design," *ACI Journal, Proceedings*, Vol. 82, No. 1, January-February 1985, pp. 45-56

Schlaich, J., Schäfer, K., and Jennewein, M., "Toward a Consistent Design of Structural Concrete," *Journal of the Prestressed Concrete Institute*, Vol. 32, No. 3, May-June 1987, pp. 74-150

Table 1 – Comparison of ACI Code and AASHTO LRFD Bridge Design Specifications

	AASHTO LRFD	ACI 2002
Struts	$f_{cu} = \dfrac{f_c'}{0.8 + 170\varepsilon_1} \le 0.85 f_c'$ $\varepsilon_1 = \varepsilon_s + (\varepsilon_s + 0.002)\cot^2\theta_s$ θ_s = smallest angle between the strut under review and the adjoining ties ε_s = average tensile strain in the tie direction f_c' = specified concrete compressive strength Note: The stress limit that assumes a minimum distributed reinforcement of 0.003 in each direction is provided.	$f_{cu} = 0.85\beta_s f_c'$ $\beta_s = 1.00$ for prismatic struts in uncracked compression zones $\beta_s = 0.40$ for struts in tension members $\beta_s = 0.75$ struts may be bottle-shaped and crack control reinforcement is included $\beta_s = 0.60$ struts may be bottle-shaped and crack control reinforcement is not included $\beta_s = 0.60$ for all other cases f_c' = specified concrete compressive strength Note: Crack control reinforcement requirement is $\sum \rho_{wi} \sin\gamma_i \ge 0.003$, where ρ_{wi} = steel ratio of the *i*-th layer of reinforcement crossing the strut under review, and γ_i = angle between the axis of the strut and the bars.
Nodes	$f_{cu} = \nu f_c'$ $\nu = 0.85$ when nodes are bounded by struts and/or bearing areas $\nu = 0.75$ when nodes anchor only one tie $\nu = 0.65$ when nodes anchor more than one tie	$f_{cu} = 0.85\beta_n f_c'$ $\beta_n = 1.00$ when nodes are bounded by struts and/or bearing areas $\beta_n = 0.80$ when nodes anchor only one tie $\beta_n = 0.60$ when nodes anchor more than one tie
Resistance Factor	$\phi = 0.7$ for struts and nodes $\phi = 0.9$ for ties	$\phi = 0.75$ for struts, ties, and nodes

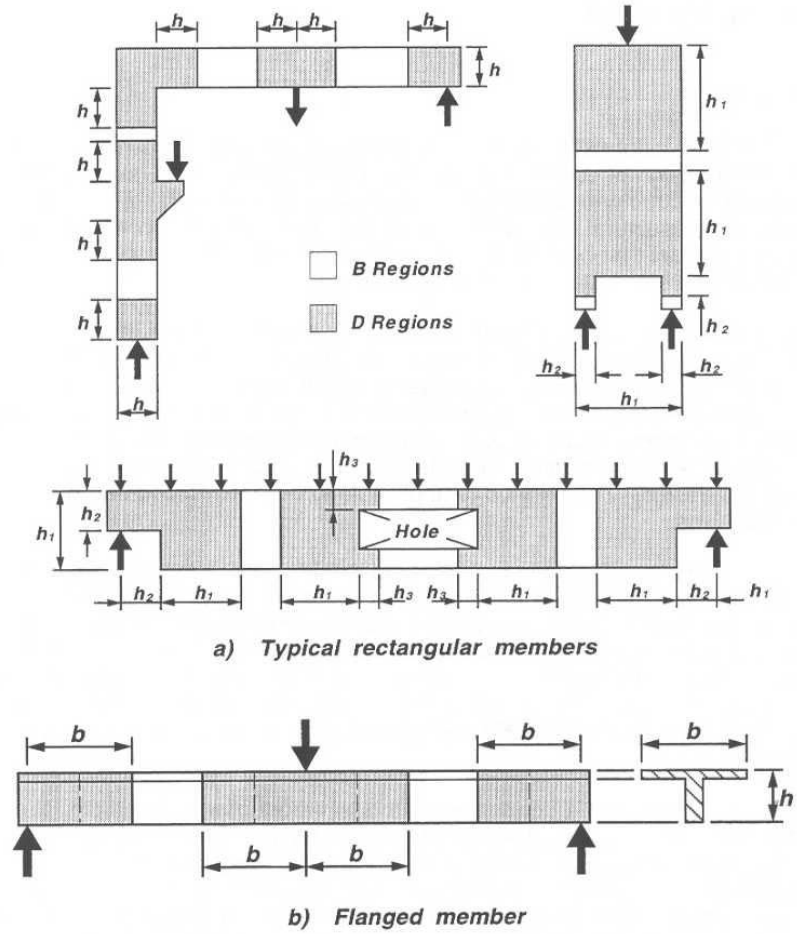

Figure 1 – B- & D-Regions for Various Types of Members

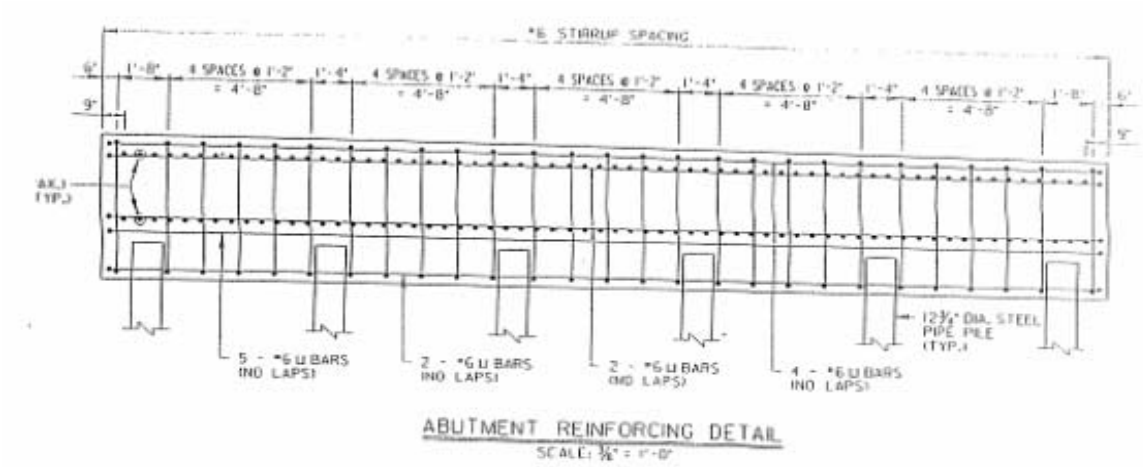

2a – Elevation Drawing

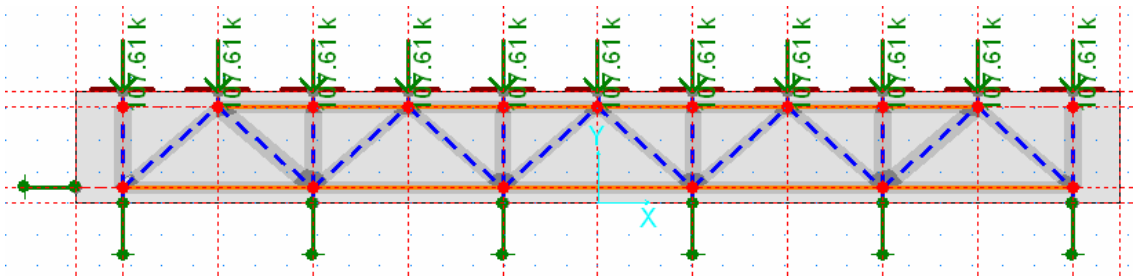

2b – STM Model

Figure 2 – Case Study 1 - Abutment on Pile

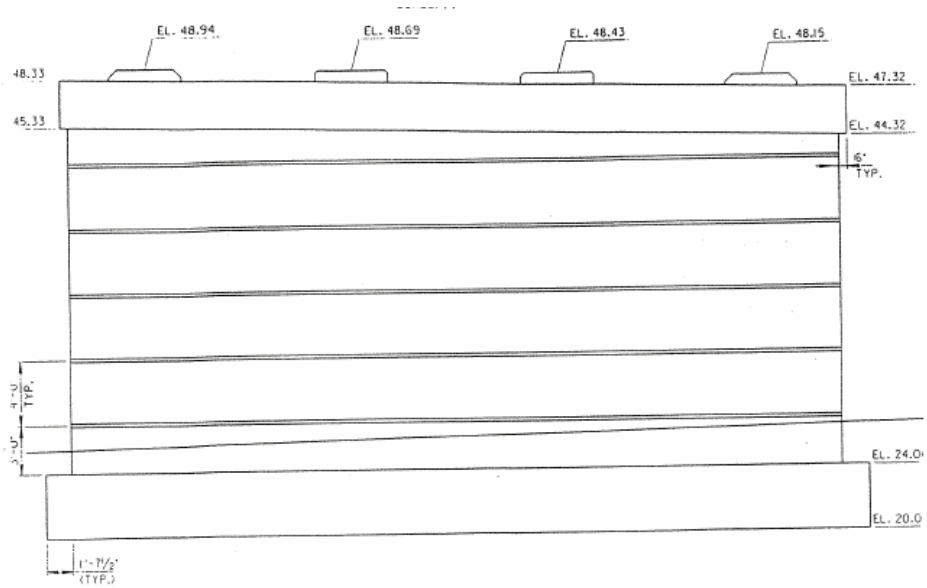

3a – Elevation Drawing

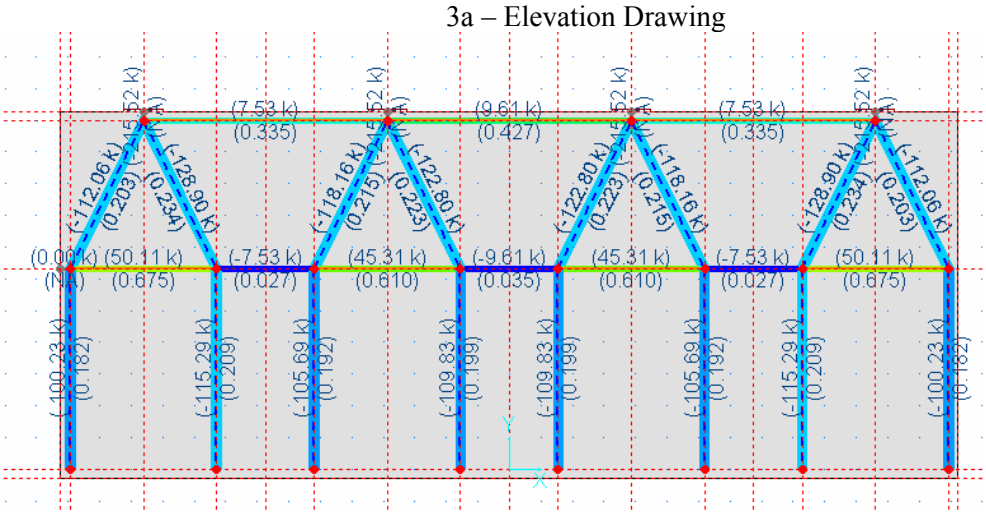

3b – STM Model

Figure 3 – Case Study 2 - Walled Pier

Figure 4 - Gantry Crane Beam at Maryland Port Authority Harbor

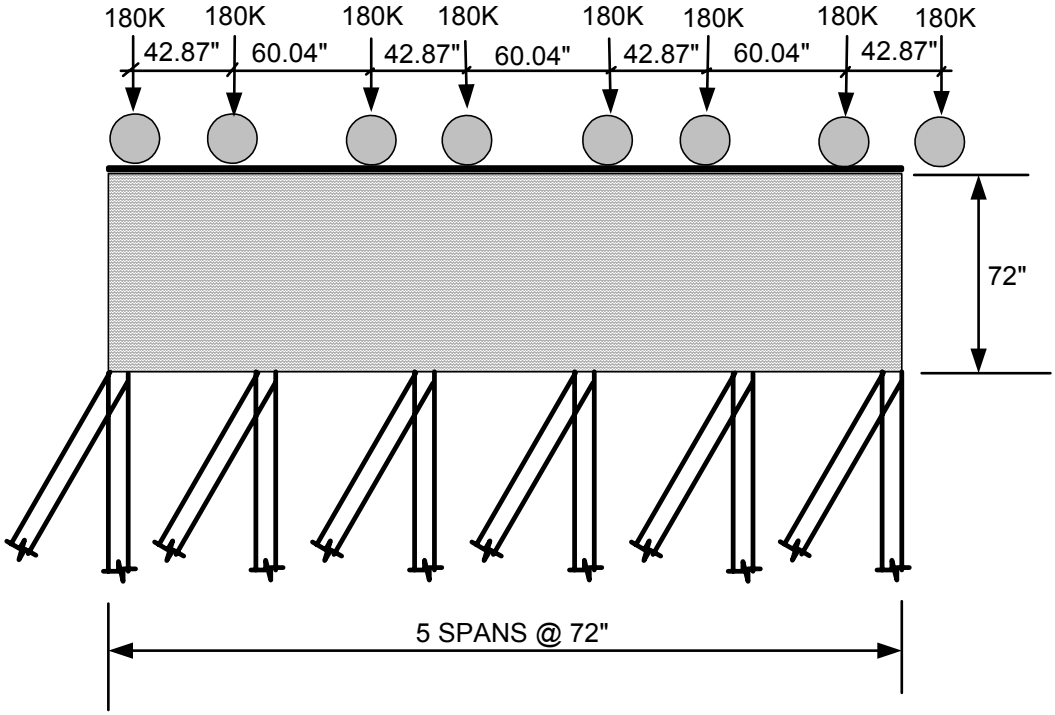

Figure 5 – Schematic Sketch of the Gantry Crane Beam

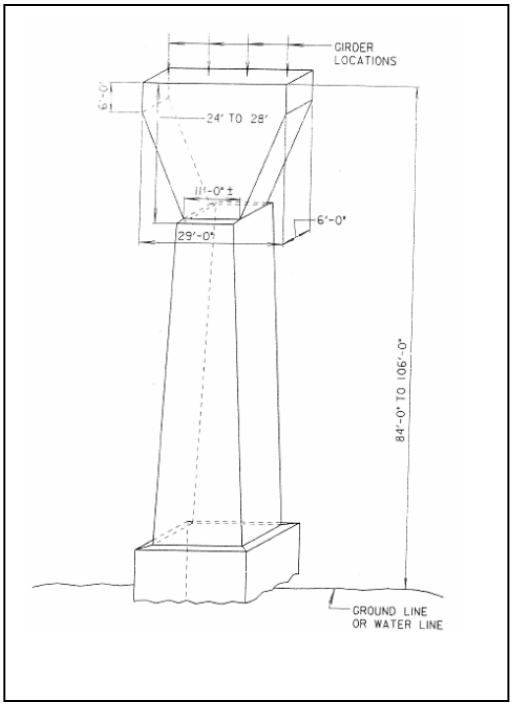

(a) Schematic View (b) Front view of one of the deep girders

Figure 6 – Case Study 4 - Hammerhead Pier Type 3 of Thomas Jefferson Bridge

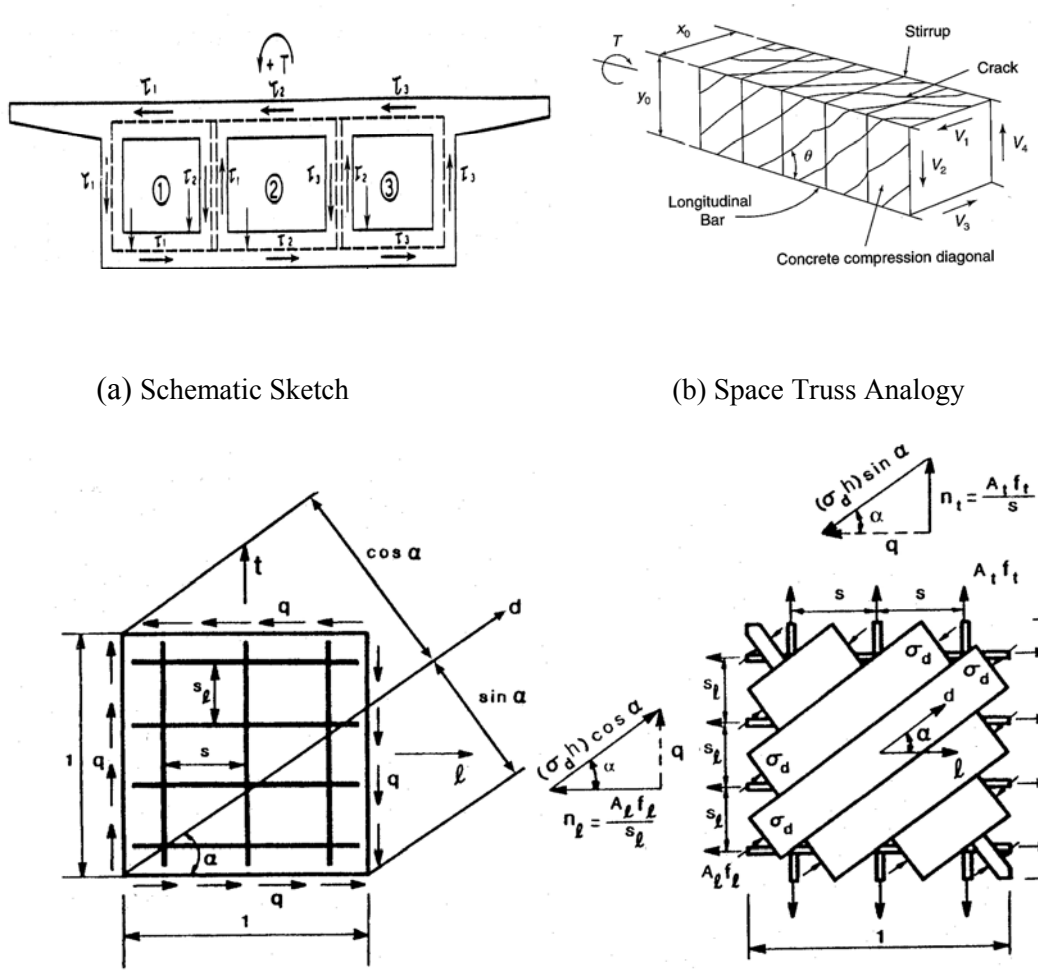

(a) Schematic Sketch (b) Space Truss Analogy

(c) Shear element (d) Truss element

Figure 7 – Case Study 5 - Strut-and-Tie Model for Girder under Torsion